TS System Catalog

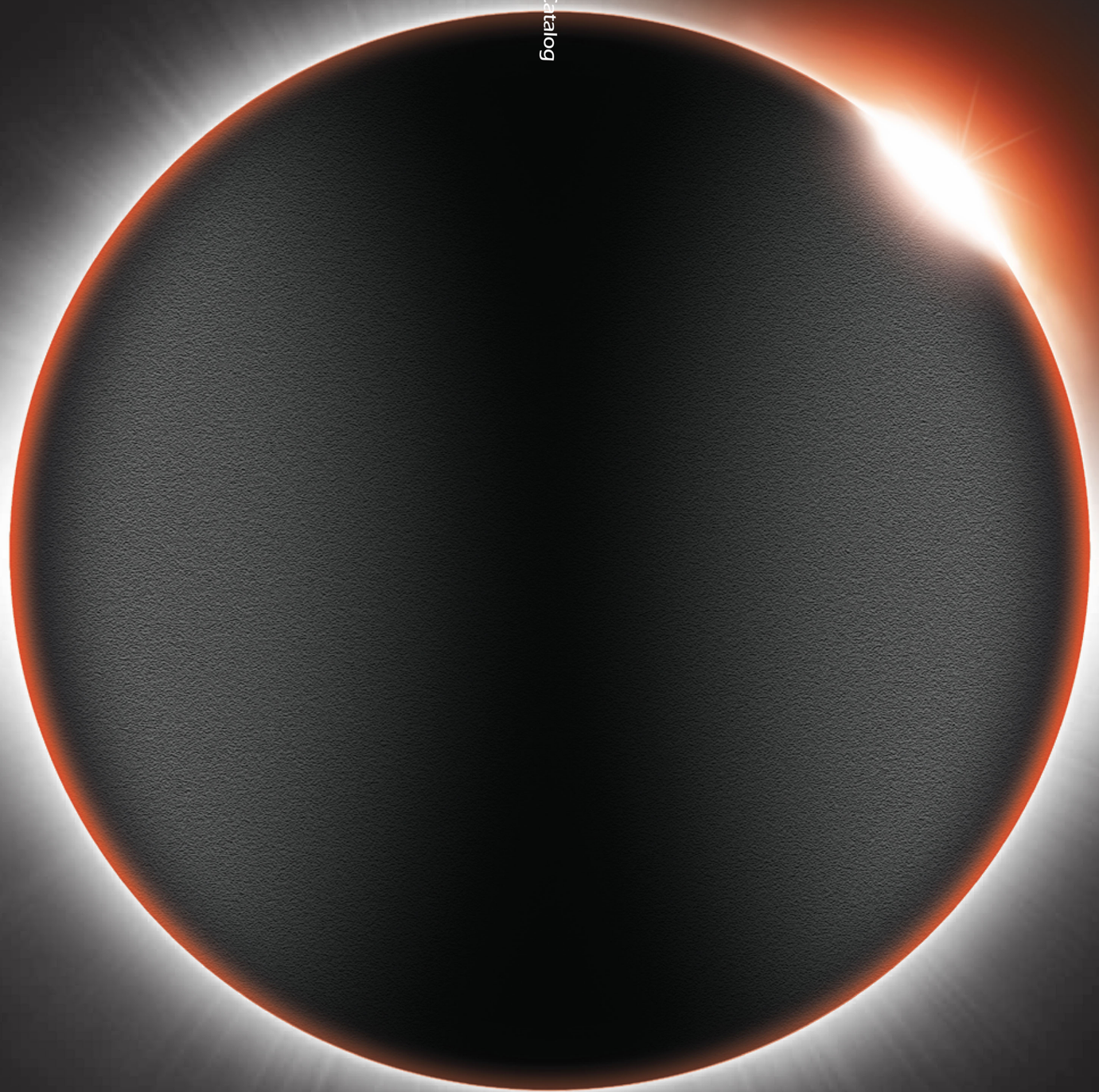

OSSTEM IMPLANT

2020-21

TS SYSTEM CATALOG

2460

И М22

ENG _ver.

VANEST

OSSTEM IMPLANT

Osstem Implant
2020-21 Comprehensive Catalog

Planning/Editing Design Center Brand Design Team
Supervision PM Headquarters, Implant Lab
Production/Distribution PM Headquarters
Date of Publication 02.2020
Publisher OSSTEM IMPLANT Co., Ltd. 3, Magokjungang 12-ro,
Gangseo-gu, Seoul 07789, (Republic of) Korea
Phone +82.2.2016.7000
Fax +82.2.2016.7001
www.osstem.com

2020 Printed in Seoul, Korea

TS SYSTEM CATALOG

VANEST

Iraq, Erbil, Bakhtiari, VANEST Building
Iraq, Baghdad, Al-Amriya

+964 (751) 717 1878
+964 (773) 772 2020

CEO' S Message





We are forever grateful
to all of our
customers for their
unwavering support to
OSSTEM IMPLANT

Osstem, South Korea's first implant manufacturer, has achieved steady growth thanks to the support and love from its customers. Osstem has put a lot of effort into continuous investment in R&D and quality innovation in order to provide products that customers are looking for and satisfied with. Based on this, it has become the No. 1 implant company in Asia Pacific region and No. 4 in the world. Moreover, it was ranked No. 1 for global fixture sales from 2017 to 2019 for 3 consecutive years and became the global provider of the implants most used by the customers all around the world.

In this 2020-21 product catalog, you can see a variety of products at a glance, including not only the implant products of Osstem's differentiated technology but also the digital dentistry products such as Oneguide the implant surgical guide, scanners, milling machines, CAD/CAM, etc. We have invested numerous efforts and time in the configuration and design of this catalog so that customers do not have any inconvenience of finding and ordering the products they need. The fixtures and abutments are listed to make it easy to understand the diameter, length, and functional behavior, in sequence that customers make a judgement for purchase.

The product type and code are displayed to help with accurate ordering. We have added the product thumbnail pages to view the components at a glance and detailed information pages to describe the functions of each component for enhanced user understanding. For GBR products, shape, size, and capacity of each product are described in detail for easy ordering as well. In addition, the release date and time are indicated for all products so that customers can easily distinguish new products from existing products for purchase.
In terms of design, we applied high-quality product images to aid ordering without looking at the actual product, and improved user convenience by applying representative colors to facilitate classification by product category.

We hope that this 2020-21 product catalog will help you effectively find and purchase all the products you need for your dental practice. Osstem Implant will continue to strive to create greater customer value as a partner to help dentists provide better care. Thank you.

CEO of OSSTEM IMPLANT
Tae-Kwan Eom

Worldwide & History

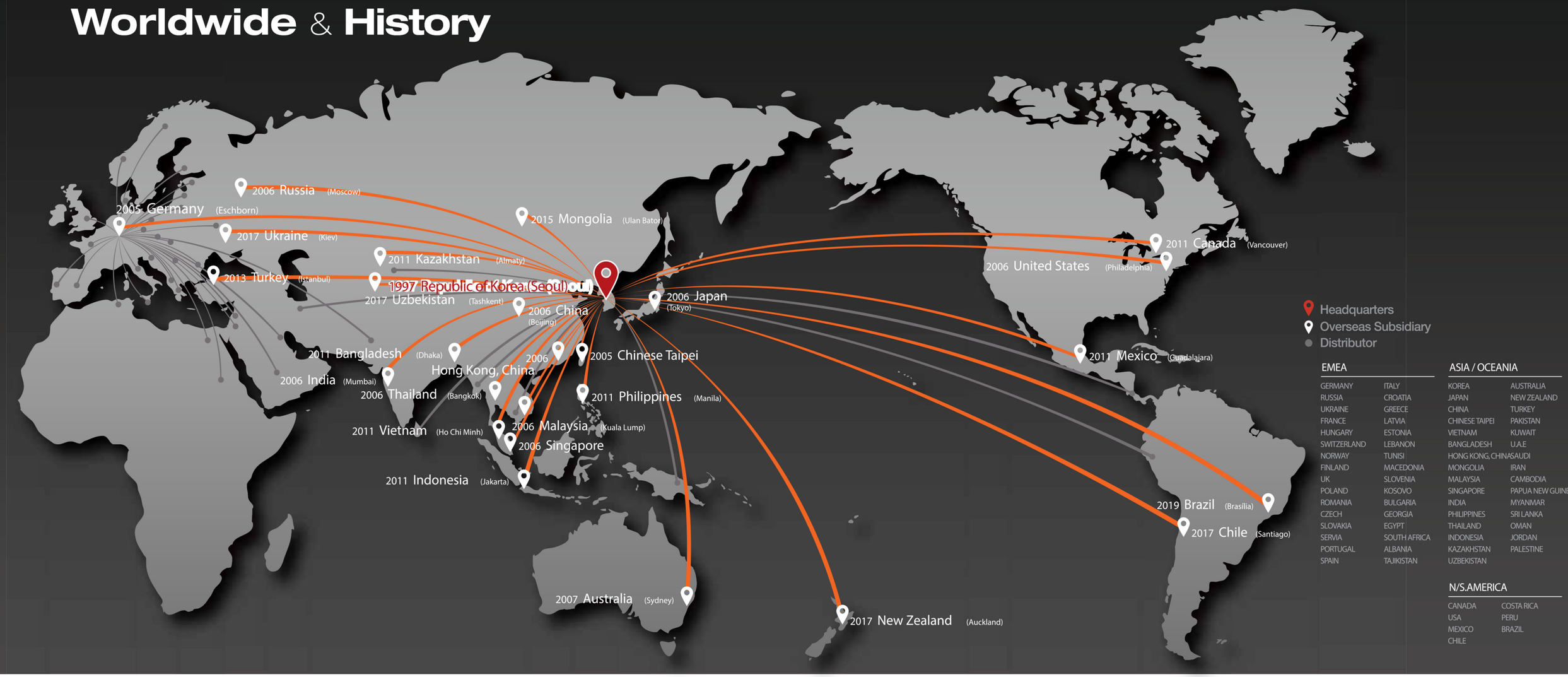

1997
01 Established Osstem (D&D System)
12 Launched "Doobunae" (health insurance claiming software)

2000
06 Developed and launched "Hanaro" (total dental clinic management software)
12 Acquired Sum Comprehensive Dental Materials (South Korea's fist implant manufacturer)

2001
01 Obtained CE-0434 certification
03 Established AIC Training Center

2002
01 Established Osstem Implant Research Center
08 Obtained US FDA certification

2003
07 Established the Information System Research Institute

2006
03 Changed company name to Osstem Implant Co., Ltd.
09 Established a subsidiary in the U.S. (HIOSSEN), and set up the manufacturing facility
12 Completed the first-phase establishment of overseas subsidiaries (12 countries)

2007
02 Listed on KOSDAQ and began trading
11 Won the "10 Million Dollar Export Tower" on Trade Day

2008
01 Established Osstem Bone Science Research Institute
07 Won the Grand Prize of the 2008 Korea Health Industry Awards by the Ministry of Health, Welfare and Family Affairs

2010
03 Launched TSIII SA implant
06 Launched TSIII HA implant

2011
06 Osstem Implant Research Institute selected as an Advanced Technology Center (ATC) by the Ministry of Trade, Industry and Energy
07 Selected as 2011 World Champ company by KOTRA
12 Selected as Current World-Class Product by the Ministry of Knowledge Economy

2012
06 Launched TSIII CA implant
07 Established the Medical Equipment Research Institute

2013
01 Launched xenograft "A-Oss"
09 Launched "K3 unit chair"

2014
05 Launched impression material "Hysil"
08 Launched whitening material "BeauTis"

2015
03 Established Osstem Pharma Co., Ltd.
12 Awarded the "50 Million Dollar Export Tower" on Trade Day

2016
01 Established VUSSEN Co., Ltd.
02 Released TSIII BA
03 Acquired Cardiotec Co., Ltd.
04 Launched the dental clinic interior design business
06 Released TSIII SOI
08 Acquired Hubit Co., Ltd.
11 Launched "OneGuide"

2017
12 Won the Presidential Award at 2017 Government Commendation for Job Creation

2018
11 Won the '2018 SW Enterprise Quality Award' by Ministry of Science and Technology
12 Won the "100 Million Dollar Export Tower" on Trade Day

2019
08 Opened manufacturing corporation in Yancheng, China
10 Established a subsidiary in Brazil (23 subsidiaries in 26 countries in operation)
12 Awarded the Brand Top, Industrial Service, Presidential Citation, Prime Minister Citation, and KITA Citation on 56th Trade Day

2020
01 Launched "OneClick" the electronic chart for dental clinics
02 Established "DenAll", the comprehensive dental portal
07 Headquarters relocated to Magok, Seoul
08 No.1 seller of fixture for 3 consecutive years (2017~2019)

TS Design & Surface Feature

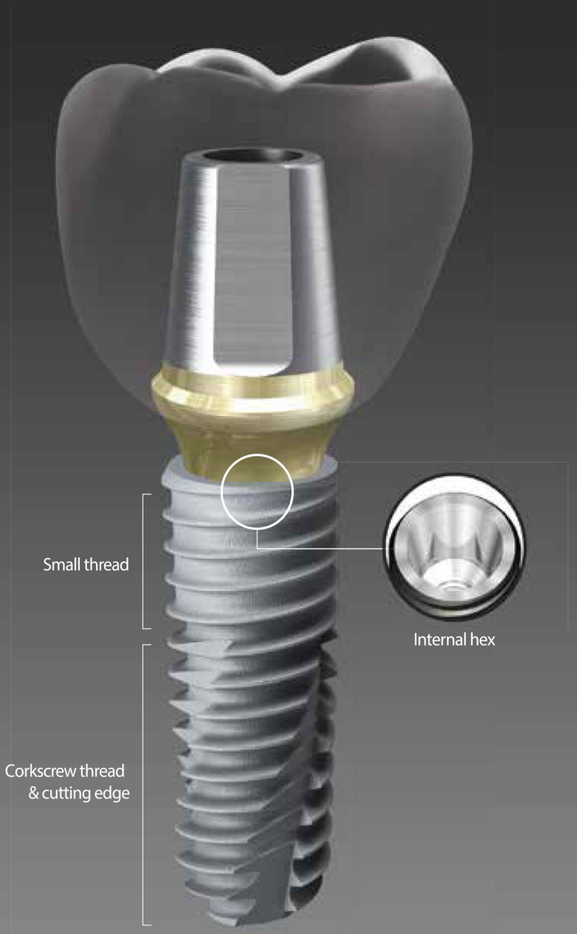

TS





TS packaging color information

Submerged type implant with an internal hex 11° tapered connection structure

- Connection - Mini / Regular
- Excellent initial stability in soft bone with smaller threads in the upper section
- Corkscrew thread & cutting edge
  - Superior self-threading effect for easy placement path adjustment
  - Enhanced initial stability in soft bone and consistent placement torque according to the drill diameter
- Various body shape options available to match the patient's bone quality and clinical condition
  - TSII (straight body) : Easy to adjust placement depth
  - TSIII (1.5° tapered body) : Excellent initial stability needed for immediate loading even in soft bone
  - TSIV (6° tapered body) : Specifically designed for use in maxillary sinus and soft bone, providing excellent initial stability
- Available surface types - SA / CA / BA / SOI

Optimized Surface through Acid Treatment

· Ra 2.0-3.0㎛ surface roughness (Note: The roughness in the upper 0.5mm part is Ra 0.5-0.6㎛)
· Consistent surface micro-pits of 1-3㎛
· Surface area increased by 46% compared to RBM treated implants

In-vitro and In-vivo Bone Response

· Osteoblast separation and ossification improved by 20% compared to RBM treated implants
· Initial bone reaction performance in big animal model (mini-pig)
  - Initial stability (RT, 4 weeks) improved by 48% compared to RBM treated implants
  - Ossification (BIC, 4 weeks) improved by 20% compared to RBM treated implants

TSIII SA Fixture

- Submerged type implant with an internal hex 11° tapered connection structure
- Optimal thread design for realization of optimal SA surface
- Tapered body design for excellent initial stability
- Excellent initial stability in soft bone with smaller threads in the upper section
- Superior self-threading effect with corkscrew thread
- Excellent initial stability needed for immediate loading even in soft bone

Narrow

- Used in tight spaces (narrow ridge)
- Easy angle compensation in anterior region
- Compatible with existing mini upper parts (not compatible with cover screw, mount, or lab analog)

Ultra-wide

- Ideal for placement in an fresh extraction socket in the posterior area or for replacing a failed implant
- Optimized apex design for excellent initial stability in an fresh extraction socket or in 3mm from the bottom
- Recommended placement torque : ≤40Ncm

※ Fixtures with a diameter of 4.5mm or greater are recommended for the posterior region

NoMount Fixture order code
: fixture product code (ex : TS3S4010S)

Pre-Mounted Fixture (fixture + mount + cover screw) order code
: B + fixture product code (ex : BTS3S4010S)

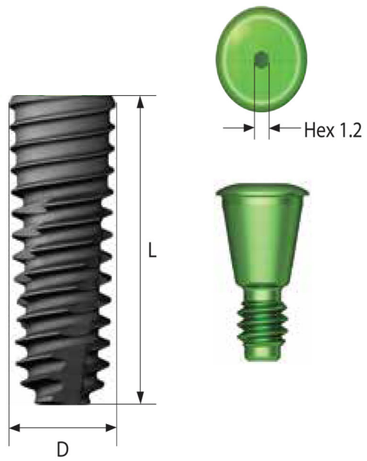

D Ø3.0 Hex 2.1 Narrow

M

L	8.5	10	11.5	13
	TS3M 3008S	TS3M 3010S	TS3M 3011S	TS3M 3013S

D Ø3.5 Hex 2.1

M

L	8.5	10	11.5	13
	TS3M 3508S	TS3M 3510S	TS3M 3511S	TS3M 3513S

D Ø4.0 Hex 2.5

R

L	7	7	8.5	10	11.5	13
	Extra short					
	TS3S 4006S	TS3S 4007S	TS3S 4008S	TS3S 4010S	TS3S 4011S	TS3S 4013S

D Ø4.5 Hex 2.5

R

L	7	7	8.5	10	11.5	13
	Extra short					
	TS3S 4506S	TS3S 4507S	TS3S 4508S	TS3S 4510S	TS3S 4511S	TS3S 4513S

D Ø5.0 Hex 2.5

R

L	6	6	6	7	8.5	10	11.5	13
	Extra short	Extra short	Short					
	TS3S 5004S	TS3S 5005S	TS3S 5006S	TS3S 5007S	TS3S 5008S	TS3S 5010S	TS3S 5011S	TS3S 5013S

Ultra-Wide

D Ø6.0 Hex 2.5

R

L	8.5	10
	TS3S 6008S	TS3S 6010S

Nominal diameter may differ from actual diameter.

Note Short implant should be used after a sufficient healing period. It is used by splinting with other implants for prosthesis.

Cover Screw

Cover Screw

- Height (H) selected according to the fixture placement depth
- Dedicated cover screw used for Ø3.5 fixture
- Hand tightened with 1.2 hex driver
- P = Platform

M Mini

R Regular

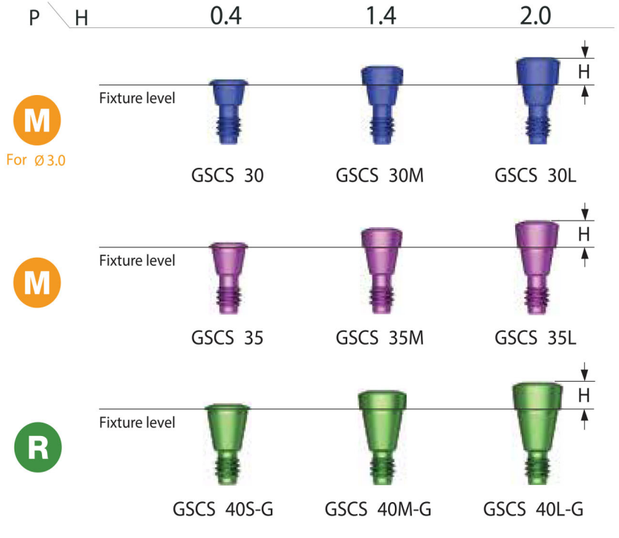

Hand Driver

- Manual driver
- Tip holding feature (except internal hex type)
- Internal hex type length: 11

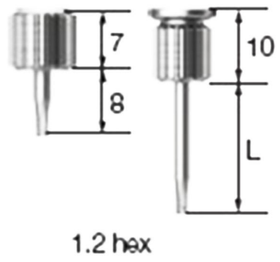

Healing Abutment

- Mini (yellow) type used for fixtures of Ø3.5 or smaller
- Hand tightened with 1.2 hex driver

M Mini

R Regular

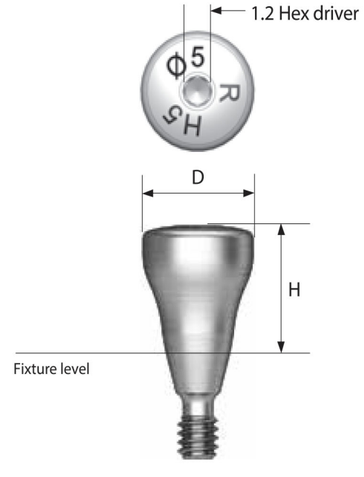

Matching table

Healing abutment	H	3.0	4.0	5.0	7.0
Abutment	G/H	1.0	2.0 or 3.0	3.0 or 4.0	5.0 and above
Impression coping	Type	Short	Short	Long	Long



Ø 4.0	TSHA 404M	TSHA 405M	TSHA 406M	TSHA 407M
Ø 4.5	TSHA 454M	TSHA 455M	TSHA 456M	TSHA 457M



Ø 5.0	TSHA 504R	TSHA 505R	TSHA 506R	TSHA 507R
Ø 6.0	TSHA 604R	TSHA 605R	TSHA 606R	TSHA 607R
Ø 7.0	TSHA 704R	TSHA 705R	TSHA 706R	TSHA 707R

Custom Healing Abutment

- Used when healing abutment in the shape of a tooth is required
- Used by removing or with resin attached
- Material : Medical PEEK
- Dedicated titanium screw used
- Hand tightened with 1.2 hex driver
- Packing unit : Abutment + Ti screw
- P = Platform

Abutment + Ti screw order code
: Product code + TH (ex : TSCHAPR7 TH)

M Mini
R Regular

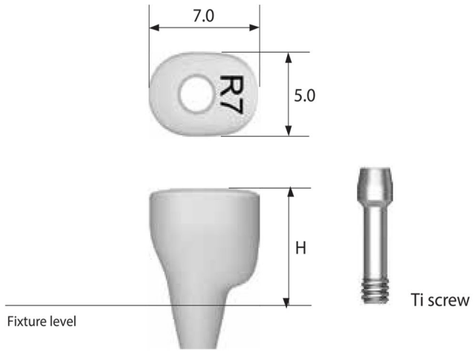

P \ H	5.0	7.0	9.0
M	TSCHAP M5	TSCHAP M7	TSCHAP M9
R	TSCHAP R5	TSCHAP R7	TSCHAP R9

M
Ti screw
: GSCHABSMT

R
Ti screw
: GSCHABSST

Link Abutment for Public (B Type)

- Abutment for producing cement-retained/combination/ screw-retained prosthesis
- Used for producing Ti + Zr custom abutment with CAD/CAM equipment
- Osstem's official implant library provided
- Fixture level impression
- Tightened with a 1.2 hex driver
- Recommended tightening torque : 20Ncm (mini), 30Ncm (regular)
- Packing unit : Abutment + EbonyGold screw

Abutment + EbonyGold screw order code
: Product code + WH (ex : TSPL4541R WH)

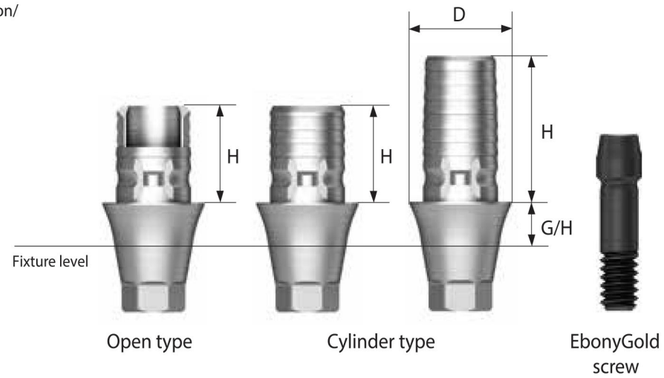

D Ø4.0

M
EbonyGold screw
: GSABSM

		H \ G/H Type	1.0	2.0	3.0
Hex	4.0	Open Type	TSPL 4041M	TSPL 4042M	TSPL 4043M
	4.0	Cylinder Type	TSPL 4041C	TSPL 4042C	TSPL 4043C
	6.0	Cylinder Type	TSPL 4061M	TSPL 4062M	TSPL 4063M
Non-Hex	4.0	Open Type	TSPL 4041MN	TSPL 4042MN	TSPL 4043MN
	4.0	Cylinder Type	TSPL 4041CN	TSPL 4042CN	TSPL 4043CN
	6.0	Cylinder Type	TSPL 4061MN	TSPL 4062MN	TSPL 4063MN

D Ø4.5

R
EbonyGold screw
: GSABSS

		H \ G/H Type	1.0	2.0	3.0
Hex	4.0	Open Type	TSPL 4541R	TSPL 4542R	TSPL 4543R
	4.0	Cylinder Type	TSPL 4541C	TSPL 4542C	TSPL 4543C
	6.0	Cylinder Type	TSPL 4561R	TSPL 4562R	TSPL 4563R
Non-Hex	4.0	Open Type	TSPL 4541RN	TSPL 4542RN	TSPL 4543RN
	4.0	Cylinder Type	TSPL 4541CN	TSPL 4542CN	TSPL 4543CN
	6.0	Cylinder Type	TSPL 4561RN	TSPL 4562RN	TSPL 4563RN

Digital Prosthetics Scan Body

TS Scan Body NEW 2021

- Used for digital impression coping
- Tightened with a 1.2 hex driver
- Packing unit : scan body + Ti screw

Scan body + screw order code
: product code + **TH** (ex : TSNSBRL**TH**)

M Mini
R Regular

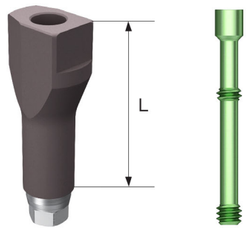

L	8 (Short)	12 (Long)
M	 TSNSBMS	 TSNSBML
R	 TSNSBRS	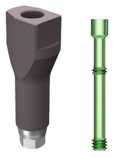 TSNSBRL

A scan body for fabrication of OneFit abutment for other manufacturers' implants (long type)

D Type	DESBSTH	Purple anodizing screw
Di Type Dt Type M Type	CUSBSTH	

Scan Body Classification Guide

- See classification by scan body (intraoral) system

TS

Mini	Regular
	
Screw Coloring : Yellow	Screw Coloring : Green

Digital Prosthetics Digital Lab Analog

Digital Lab Analog

- Lab Analog for making the digital implant working model
- Ease of classification through the color of Lab Analog
- Convenient connection through lab analog tools such as Reamer Drill and Positioning Jig
- Packing unit : digital lab analog + screw

TS

Mini Ø3.0	Mini Ø3.5	Regular	Multi Abt
			
TSDLA**300**	TSDLA**350**	TSDLA**400**	TSMDLA

Multi Abutment

- Used for producing screw-retained prosthesis in multiple case
- Same platform as multi angled abutment
- Producing prosthesis with US esthetic low cylinder (regular/non-hex)
- Tightened with a dedicated outer driver (code : MAOD)
- Recommended tightening torque : 30Ncm (mini/regular)
- Packing unit : Abutment + Carrier

Abutment + carrier order code
: Product code + P (ex : TSMA5030 P)

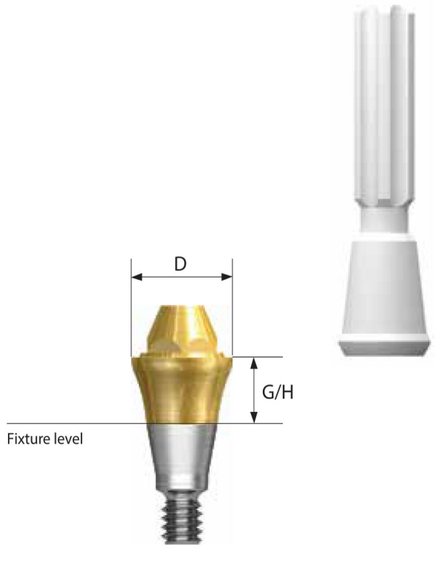

D Ø4.8

M

G/H	1.0	2.0	3.0
	TSMA 5010M	TSMA 5020M	TSMA 5030M

D Ø4.8

R

G/H	1.0	2.0	3.0
	TSMA 5010	TSMA 5020	TSMA 5030

Esthetic-low Abutment

Esthetic-low Pick-up Impression Coping

- Components for fixture level impression taking
- Pick-up impression coping for Esthetic-low Abutment
- Hand tightened with a 1.2 hex driver
- Packing unit : Impression coping body + Guide pin(*)

M Mini
R Regular
W Wide

Components

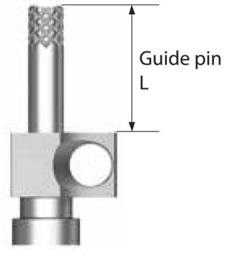

Multi Abutment Components

Multi Abutment Outer Driver

- Dedicated torque driver for multi abutment





MAOD

Multi Abutment Machine Driver

- Dedicated machine driver for multi abutment





MAMD

Multi Abutment NP-Cast Cylinder

- Used for producing screw-retained prosthesis in multi abutment
- Used to produce customized prosthesis by casting with nonprecious metal alloy
- Cylinder melting temperature : 1,400~1,550℃
- Tightened with a 1.2 hex driver
- Recommended tightening torque : 20Ncm
- Packing unit : Cylinder + Ti cylinder screw
- Multi angled abutment can be used (Non-Hex)

Abutment + Ti Screw order Code
: Product code + TH (ex : TSMN500 TH)

M Mini
R Regular

Ti screw
: MTS200

D \ Type	Hex	Non-Hex
	 TSMN 500	 TSMN 500N

Multi Combination Cylinder

- Used for producing combination prosthesis in multi abutment
- Tightened with a 1.2 hex driver
- Recommended tightening torque : 20Ncm
- Packing unit : Cylinder + Ti cylinder screw
- Multi angled abutment can be used (Non-Hex)

Abutment + Ti screw order Code
: Product code + TH (ex : TSMC500 TH)

M Mini
R Regular

Ti screw
: MTS200

D \ Type	Hex	Non-Hex
	 TSMC 500	 TSMC 500N

PROSTHETIC FLOW DIAGRAM 4

Multi / Multi Angled

Abutment Level Impression



1.2 Hex Hand Driver

416p

Multi Angled Abutment

- Used for producing screw-retained prosthesis in multiple case
- Same platform as multi abutment
- Fixture placement angle compensated up to 108°
- Producing prosthesis with US esthetic low cylinder (regular/non-hex)
- Using dedicated abutment screw
- Tightened with a 1.2 hex driver
- Recommended tightening torque : 20Ncm (mini), 30Ncm (regular)
- Packing unit : Abutment + EbonyGold screw

Abutment + EbonyGold screw + Carrier order code
: P roduct code + WH (ex : GS17MAS4840 WH)

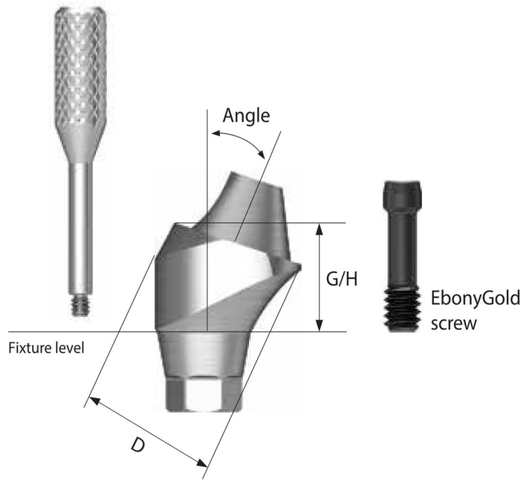

D Ø4.8

M

EbonyGold screw
: GSMABSM

Angle	G/H	2.5	3.0	4.0
17°		GS17MAM 4820	GS17MAM 4830	GS17MAM 4840

Angle	G/H	3.5	4.0	5.0
30°		GS30MAM 4830	GS30MAM 4840	GS30MAM 4850

D Ø4.8

R

EbonyGold screw
: GSMABSS

Angle	G/H	2.5	3.0	4.0	5.0
17°		GS17MAS 4820	GS17MAS 4830	GS17MAS 4840	GS17MAS 4850

Angle	G/H	3.5	4.0	5.0
30°		GS30MAS 4830	GS30MAS 4840	GS30MAS 4850

TS Multi Ti Base

- Used for producing combination prosthesis in TS multi abutment
- Used in connection with TS multi scan body
- Abutment level impression
- Non-hex type only
- Tightened with a 1.2 hex driver
- Recommended tightening torque : 20Ncm
- Packing unit : Ti base + Ti base screw

Ti base + Ti screw order Code
: Product code + TH (ex : TSMTB505G TH)

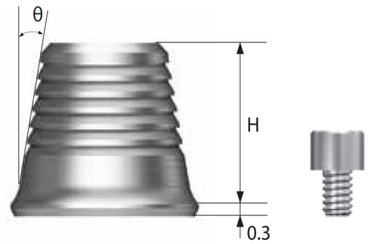

H	Degree (°)	5°	10°
4		TSMTB 0405G	TSMTB 0410G
6		TSMTB 0605G	-

TS Multi Scan Body

- Used by connecting to the TS multi abutment for oral scanning
- Used for non-hex type
- Hand tightened with a 1.2 hex driver



TSMSBC

K3™ NEXT Dental Unit Chair

K3™ Next

- Patient Chair - High Performance Hydraulic Motor with noise filter
- Cuspidor Unit - Water and air delivery and intake & outtake unit connection to junction box
- Doctor Table/Delivery System - Holds various Handpieces and master control unit with LCD display
- Assistant delivery system - Controls the chair's movement/Holds instruments
- LED Dental Light - Touchless on/off sensor
- Foot Control - Controls chair positioning and Handpieces

※ 5 Year Limited Warranty, please refer to the full warranty statement



K3™ NEXT Dental Unit Chair Features

K3™ Smart Delivery System (Mount)

- Display all your handpieces settings on the 4.3" color LCD
  - Water Controller
  - 3-way Syringe
  - 2 High speed Connection
  - 1 Low speed Connection
  - Built-in Ultra sonic Scaler (Included)



Mount Option

LED Dental Light

- Built-in LED Light – Adjustable Brightness
- Blue Light Cut Off Control – Reduced Curing Speed during Resin Treatment
- Touchless On/Off motion sensor
- Removable Handles (Autoclavable)



LED Dental Light

Low-Speed Handpiece Options

- Air Turbine Type
  - Avg. 22,000
  - Air/Less Heat
- Electric Motor Type
  - Avg. 32,000
  - Electricity

Color Options

- The K3 is available in a wide range of color options to match any clinic's interior settings

※ Actual product color may vary from the images shown



Brown



Dark Blue



Dark Violet



Blue



Red



Gold



Ivory